efector250

O2V124

O2VIRPKG/O/V/GM/E1/E2/T

Object recognition

Please note the wiring of the sensor and the sockets (see data sheet) as for 8-pole sockets the core colours are not standardised.

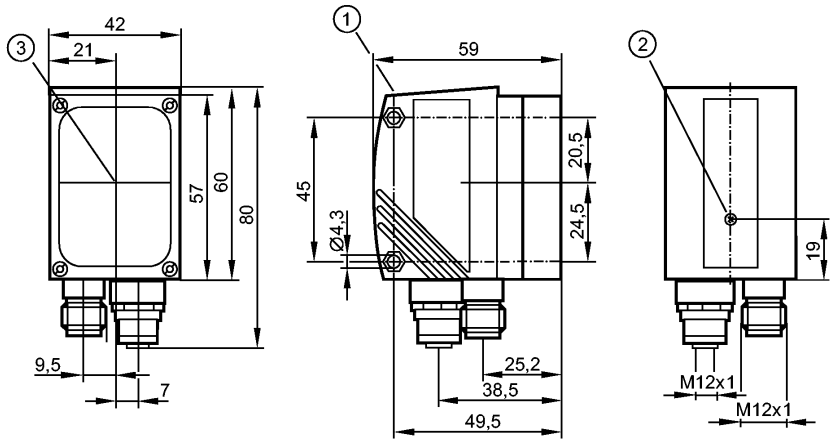

1: display
2: Focus setting
3: Centre of the lens axes

Made in Germany

Product characteristics							
Object inspection sensor							
Max. field of view size: 400 x 300 mm							
Lighting: infrared (850 nm)							
Electrical data							
Operating voltage	[V]	24 DC ± 10 %					
Current consumption	[mA]	< 300					
Type of light		Infrared light 850 nm					
Protection class		III					
Reverse polarity protection		yes					
Connection external illumination	[V]	24 V DC					
Type of sensor		CMOS image sensor B/W, VGA resolution 640 x 480					
Inputs							
Circuit		max. 2 (configurable) / 24 V PNP to IEC 61131-2 type 2					
Trigger		external; 24 V PNP to IEC61131-2 type 2 internal					
Outputs							
Output		max. 5 (configurable) / 24 V PNP					
Max. current load per output	[mA]	100					
Voltage drop	[V]	< 2					
Short-circuit protection		yes					
Overload protection		yes					
Range							
Operating distance	[mm]	75, 100, 200, 400, 1000, 2000					
Field of view size	[mm]	15 x 11	20 x 15	40 x 30	80 x 60	200 x 150	400 x 300
Resolution	[mm]	0.08	0.12	0.25	0.52	1.25	2.53
Detection rate	[Hz]	≤ 20					
Motion speed	[m/s]	typ. 1					

efector250

O2V124

O2VIRPKG/O/V/GM/E1/E2/T

Object recognition

Software / programming

Parameter setting options	via 2 pushbuttons and 10-segment display or via PC / notebook with operating software

Interfaces

parameter setting interface	Ethernet TCP/IP; 10Base-T / 100Base-TX
Process interface	Ethernet TCP/IP (Port: 50010), EtherNet/IP
IP address	192 .168 .0 .59
subnet mask	255.255.255.0 (Class C)
gateway IP address	192 .168 .000 .201
MAC address	see type label

Environment

Ambient temperature	[°C]	-10...60
Storage temperature	[°C]	-40...85
Protection		IP 67

Tests / approvals

EMC	radiation of interference to EN 61326 noise immunity to EN 61326
Shock resistance	EN 60947-5-2, 7.4.1 IEC 60068-2-27
Vibration resistance	EN 60947-5-2, 7.4.2 IEC 60028-2-6:

Mechanical data

Housing materials		housing: diecast zinc powder-coated; window: glass; LED window: polycarbonate
Weight	[kg]	0.414

Displays / operating elements

Display	Function display 3 x LED green 4 x LED yellow Display unit / status 4-digit 10-segment display

Electrical connection

Connection	M12 plug, 8 poles M12 socket, 4 poles

Wiring

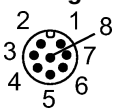

M12: Process connection
1: U+
2: trigger input
3: 0 V
4: Switching output 5 / trigger output
5: Switching output 3 / Ready
6: Switching output 4 / OUT
7: Switching output 1 / Input 1
8: Switching output 2 / Input 2

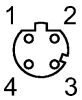

Ethernet: parameter setting/process connection
1: TD+
2: RD+
3: TD-
4: RD-

Accessories

Accessories (optional)	Operating software; Mounting accessories

Remarks

O2V124

O2VIRPKG/O/V/GM/E1/E2/T

Object recognition

Remarks	cULus - Class 2 source required
Pack quantity [piece]	1

Please note the wiring of the sensor and the sockets (see data sheet) as for 8-pole sockets the core colours are not standardised.